Wednesday, June 14, 2017 11:33 AM

Unit 10 Solutions - Electric Circuits

1. $Q = 12\,C$

$t = 1.5\,s$

$I = ?$

$$I = \frac{Q}{t} = \frac{12}{1.5} = 8\,A$$

2. $R = ?$

$I = 1.50\,mA = 1.50 \times 10^{-3}\,A$

convert milliamps to amps

$V = 45.0\,V$

$$V = IR$$

$$\frac{45.0}{1.50\times10^{-3}} = \frac{(1.50\times10^{-3})R}{1.50\times10^{-3}}$$

$30{,}000\,\Omega = R$

3. $R = ?$

$P = 60.0\,W$

$V = 120.0\,V$

$$P = IV$$

$$\frac{60.0}{120.0} = \frac{I(120.0)}{120.0}$$

$0.5\,A = I$

$$V = IR$$

$$\frac{120.0}{0.5} = \frac{(0.5)R}{0.5}$$

$240.0\,\Omega = R$

4. $P = 1500\,W$

$V = 110\,V$

$R = ?$

$$P = IV$$

$$\frac{1500}{110} = \frac{I(110)}{110}$$

$13.\overline{63}\,A = I$

$$V = IR$$

$$\frac{110}{13.\overline{63}} = \frac{(13.\overline{63})R}{13.\overline{63}}$$

$8.0\overline{6}\,\Omega = R$

$8.1\,\Omega = R$

5. $I = 5.20\,A$

$t = 1.4\,s$

$n = ?$

$$I = \frac{Q}{t}$$

$$(1.4)5.20 = \frac{Q}{1.4}(1.4)$$

$7.28\,C = Q$

$$Q = ne$$

$$\frac{7.28}{1.6\times10^{-19}} = \frac{n(1.6\times10^{-19})}{1.6\times10^{-19}}$$

4.55×10^{19} electrons $= n$

6. $t = ?$

$$Q = ne$$

$$I = \frac{Q}{}$$

$t = \frac{57.6}{}$

6. $t = ?$

$n = 3.6 \times 10^{20}$ electrons

$I = 8.0\ A$

$Q = ne$

$Q = (3.6\times10^{20})(1.6\times10^{-19})$

$= 57.6\ C$

$I = \frac{Q}{t}$

$8.0 = \frac{57.6}{t}$

$t = \frac{57.6}{8.0}$

$t = 7.2\ s$

7. $V = 15\ V$

$R = 80\ \Omega$

$t = 6.0\ s$

$Q = ?$

$V = IR$

$\frac{15}{80} = \frac{I(80)}{80}$

$0.1875\ A = I$

$I = \frac{Q}{t}$

$(6.0)(0.1875) = \frac{Q}{6.0}(6.0)$

$1.125\ C = Q$

$Q = 1.13\ C$

8. potential difference = voltage = $V = ?$

$I = 5.0\ A$

$R = 12.0\ \Omega$

$V = IR$

$= (5.0)(12.0)$

$V = 60\ V$

9. $P = 3 \times 60\ W = 180\ W$

3 bulbs at 60W each

$V = 120\ V$

$I = ?$

$P = IV$

$\frac{180}{120} = \frac{I(120)}{120}$

$1.5\ A = I$

10.

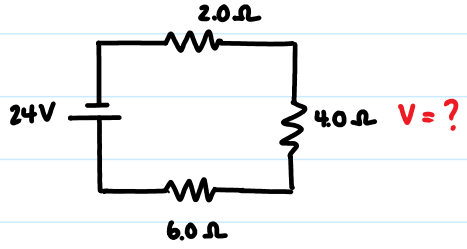

In series, $I_T = I_1 = I_2 = I_3 \ldots$

So, Find R_T, then I_T

$R_T = 2.0 + 4.0 + 6.0 = 12\ \Omega$

$V_T = I_T R_T$

$\frac{24}{} = \frac{I_T(12)}{}$

$I_T = 2\ A$

$I = 2A$ for the $4.0\ \Omega$ resistor

Now, find V

$V = IR$

$\frac{24}{12} = \frac{I_T(12)}{12}$ $\quad I_T = 2A$

$V = IR$

$= (2)(4)$

$V = 8V$

11.

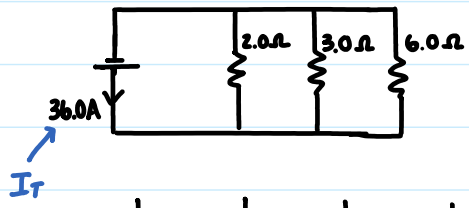

In parallel, $V_T = V_1 = V_2 = V_3 \ldots$

Find R_T then V_T

$$\frac{1}{R_T} = \frac{1}{2.0} + \frac{1}{3.0} + \frac{1}{6.0}$$

$$\left(\frac{1}{R_T}\right)^{-1} = (1)^{-1}$$

$R_T = 1\Omega$

$V_T = I_T R_T$

$= (36.0)(1)$

$= 36V$

$V = 36V$ for the 3.0Ω resistor

Now find I

$V = IR$

$\frac{36}{3.0} = \frac{I(3.0)}{3.0}$

$12A = I$

12.

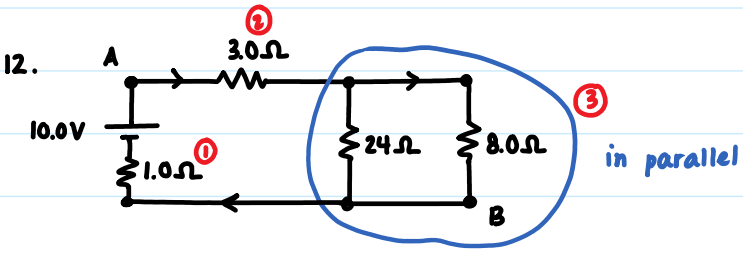

in parallel

a) $R_T = 1.0 + 3.0 + \left(\frac{1}{24} + \frac{1}{8.0}\right)^{-1}$

$= 1.0 + 3.0 + 6.0$

$R_T = 10\Omega$

b) current at A is the total current

$V_T = I_T R_T$

$\frac{10.0}{10.0} = \frac{I_T(10.0)}{10.0}$ $\quad 1.0A = I_T$

c) potential difference (voltage) across 8.0Ω resistor

V is same across the 24Ω and 8.0Ω resistors (in parallel)

They are in series with the 1.0Ω and 3.0Ω resistors

$V_T = V_1 + V_2 + V_3$

$V_T = V_1 + V_2 + V_3$

$V_1 = I_1 R_1$ $\qquad$ $V_2 = I_2 R_2$

$= (1.0)(1.0)$ $\qquad$ $= (1.0)(3.0)$

$= 1.0\,V$ $\qquad$ $= 3.0\,V$

$V_T = V_1 + V_2 + V_3$

$10.0 = 1.0 + 3.0 + V_3$

$6.0\,V = V_3$

d) Now that we know the voltage, we can calculate I.

$V = IR$

$\frac{6.0}{8.0} = \frac{I(8.0)}{8.0}$

$0.75\,A = I$

13.

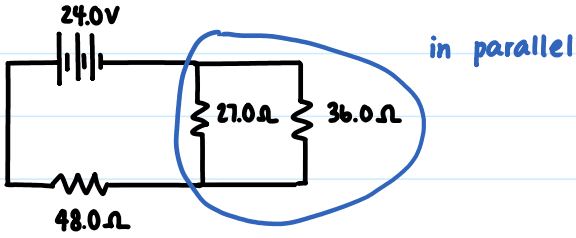

a) $R_T = 48.0 + \left(\frac{1}{27.0} + \frac{1}{36.0}\right)^{-1}$

$= 48.0 + 15.43$

$R_T = 63.4\,\Omega$

b) $V_T = I_T R_T$

$\frac{24.0}{63.4} = \frac{I_T(63.4)}{63.4}$

$0.38\,A = I_T$

14.

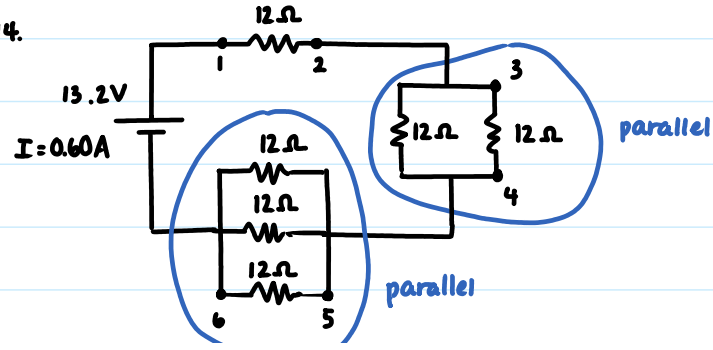

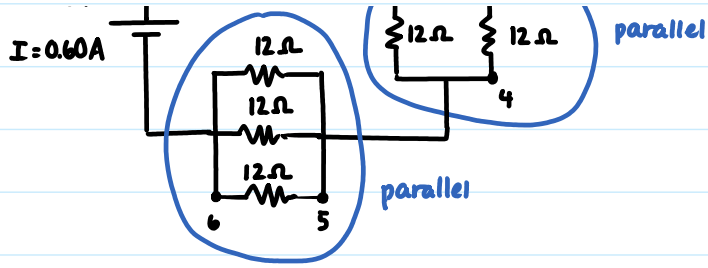

a) $V_T = I_T R_T$

$\underline{13.2} = \underline{(0.60)R_T}$

0.60 0.60

$22\Omega = R_T$

short way

or

$R_T = 12 + \left(\frac{1}{12} + \frac{1}{12}\right)^{-1} + \left(\frac{1}{12} + \frac{1}{12} + \frac{1}{12}\right)^{-1}$

$= 12 + 6 + 4$

$R_T = 22\Omega$

long way

b) Between 3 & 4 ▸ the two resistors have the same voltage.

Their equivalent resistance is 6Ω.

$V = IR$

$= (0.6)(6)$ total I, equivalent R

$= 3.6\,V$

Now use the resistance of 12Ω to find I.

$V = IR$

$\frac{3.6}{12} = \frac{I(12)}{12}$

$I = 0.3\,A$

15.

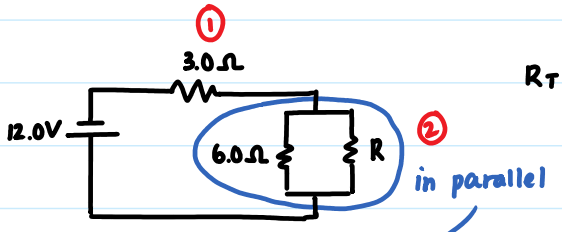

$R_T = 4.0\Omega$

$4.0 = 3.0 + R_{eq}$

$1.0 = R_{eq}$

$\frac{1}{1.0} = \left(\frac{1}{6.0} + \frac{1}{R}\right)$

$(0.8\bar{3})^{-1} = \left(\frac{1}{R}\right)^{-1}$

$1.2\,\Omega = R$

$V_T = I_T R_T$

$\frac{12.0}{4.0} = \frac{I_T(4.0)}{4.0}$

$3.0A = I_T$

Find V in 3.0 Ω resistor

$V = IR$

$= (3.0)(3.0)$

$= 9.0V$

Find V across 6.0 Ω and R

(same voltage for both)

$V_T = V_1 + V_2$

$12.0 = 9.0 + V_2$

$3.0V = V_2$

Now that we know voltage across resistor R, we can find the current.

$V = IR$

$\frac{3.0}{1.2} = \frac{I(1.2)}{1.2}$

$2.5A = I$

16.

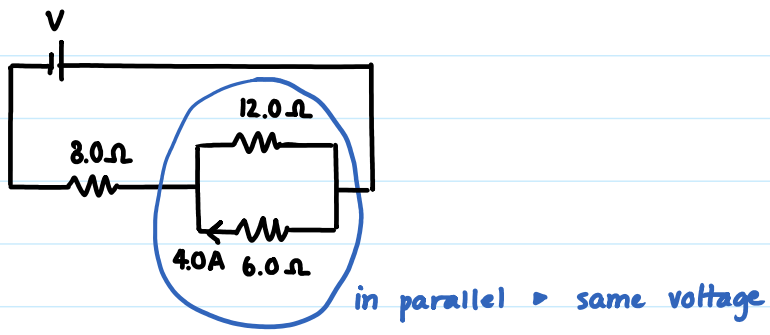

Voltage across the 6.0 Ω resistor

$V = IR$

$= (4.0)(6.0)$

$= 24.0V$

Voltage across the 12.0 Ω resistor = 24.0 V

Now find I.

$V = IR$

$\frac{24.0}{12.0} = \frac{I(12.0)}{12.0}$

$2.0\,A = I$

Total current in the circuit : $I_T = 2.0A + 4.0A = 6.0\,A$

Last step, find R_T and use it to find V_T.

$$R_T = 8.0 + \left(\frac{1}{6.0} + \frac{1}{12.0}\right)^{-1}$$

$$= 8.0 + 4.0$$

$$= 12\,\Omega$$

$$V_T = I_T R_T$$

$$= (6.0)(12)$$

$$V_T = 72\,V$$

17.

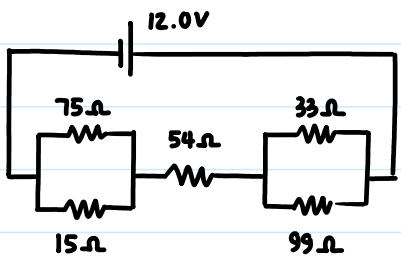

a) $$R_T = \left(\frac{1}{75} + \frac{1}{15}\right)^{-1} + 54 + \left(\frac{1}{33} + \frac{1}{99}\right)^{-1}$$

$$= 12.5 + 54 + 24.75$$

$$= 91.25\,\Omega$$

$$R_T = 91.3\,\Omega$$

b) I through $54\,\Omega$ resistor same as I_T

$$V_T = I_T R_T$$

$$\frac{12.0}{91.25} = \frac{I_T(91.25)}{91.25}$$

$$0.132\,A = I$$

c) $P = IV$ need V first

$$V = IR$$

$$= (0.132)(54)$$

$$P = IV$$

$$= (0.132)(7.13)$$

$= (0.132)(54)$

$= 7.13\ V$

$= (0.132)(7.13)$

$P = 0.94\ W$